GDX Audio and Video Door Entry

Call Control Unit: Audio & Video Installation Guide

Ref. CCU-LIT-001 V2.0 August 2023

Technical Support	pacgdxsupport@comelit-pac.co.uk **T: +44 (0)161 406 3400 — Option 2**
Customer Services	pacgdxcustomerservice@comelit-pac.co.uk **T: +44 (0)161 406 3400 — Option 1**
Training	pacgdxcustomerservice@comelit-pac.co.uk **T: +44 (0)161 406 3400 — Option 1**

Comelit-PAC Limited
Registered in England and Wales No. 04311885. VAT No. GB 795 645 27

UNITED KINGDOM: Unit 2B The Quad, Butterfield Business Park, Luton, Bedfordshire, LU2 8EF

ITALY: Comelit Group S.p.A., Via Don Arrigoni n° 5, 24020 - Rovetta S. Lorenzo - BG

WITH • YOU • ALWAYS

Health and Safety

Please read all these instructions and save them for later use.

The installation of this system must meet the requirements of the country of installation's National Wiring Regulations (BS7671, IET National Wiring Regulations in the UK) and EN60950-1. It must only be carried out by suitably competent, qualified and experienced personnel.

Injury or death by electric shock may result if ignored.

It must also comply with any local Fire, Health and Safety regulations. A secured door that may be part of an escape route must always be fitted with the following.

- A fail-safe lock so that the door will be released if the power fails. Ideally a magnetic lock should be used as these are less likely to jam or seize.
- A normally-closed break-glass or manual pull in the lock supply wiring so that in an emergency the fail-safe lock can be immediately powered off.

Risk of injury or death if ignored.

The controller must be earthed.

Isolate the controller power supply before working on the controller.

Failure to do so may damage the unit.

Cabling

The cabling used in the control systems, should be routed in a manner to avoid running alongside any heavy load switching signals either within equipment or wiring. Alternatively, you can use screened cable to reduce interference and/or cross the cable at right angles every 3.3–6.6ft / 1–2m to reduce the interference if possible.

Communications Cabling

Use CW1308 or a minimum of CAT5e U/UTP, multi-core, twisted pair with a bare/plain copper conductor.

Cabling for Lock Power

2-core 0.75mm standard flex

ESD Precautions

The product contains static-sensitive devices and earth grounding strap should be worn when handling the hardware.

RFID Devices

RFID technology is now widely used in a number of industries, it is possible that interaction between your credential and other devices in the vicinity may cause incorrect operation or recognition. Should you suspect that you have experienced such a problem, ensure the interfering device is out of range. **This only applies if any RFID devices have been fitted**

WEEE Directive and Product Disposal

At the end of its serviceable life this product should not be treated as household or general waste.

It should be handed over to the applicable collection point for the recycling of electrical and electronic equipment or returned to the supplier for disposal.

Lithium Batteries

Failure to read the following guidelines carefully may result in injury.

There is a danger of explosion if lithium batteries are incorrectly replaced or handled.

- Ensure that lithium batteries are never short circuited.
- Always store lithium batteries separately in non-conducting materials.
- Never replace a lithium battery with the incorrect type.
- Lithium batteries should be disposed of safely and legally according to your local area, state or country laws.

Equipment Electrical Rating

All electrical equipment should have electrical ratings clearly stated on an identification label and in any documentation provided. Any applicable fuse ratings will also be specified within the documentation.

Product Information

This section will list all relevant specifications and standards that apply to the GDX Audio Line Card.

Product Specifications

Weight	10 kg
Temperature	0 °C to +35 °C
Humidity	0% to 90% Relative Humidity
Input Voltage	240 VAC, 50 Hz
Power	0.8A at 240VAC

Product Approvals Standards

EMC	2014/30/EU
Safety	2014/35/EU
RoHS	2011/65/EU
WEEE	2012/19/EU

https://pacgdx.com/compliance-declarations

Product Enclosure Dimensions

Suitable wall fixings must be used for the mounting of wall equipment depending on the wall surface.

Size (mm)	600 (h) × 400 (w) × 100 (d)
Wall type	Brick
Max weight	10kg

Use appropriate fixings for the wall type.

1 Overview

This installation guide is intended only as a summary and checklist for installers familiar with this equipment.

Installation Wiring

Installation wiring must be in accordance with BS7671 IET Wiring Standards and Regulations. It must be carried out by suitably qualified personnel.

Failure to do so can result in injury or death.

The enclosure must be earthed by the provision of a good earth to the input supply connections. Isolate the supply before working on the equipment.

2 Product Mounting

All equipment should be located in a safe location whilst remaining accessible for competent service personnel. It is the responsibility of the competent personnel to observe appropriate precautions when handling, lifting or installing heavy loads that require wall mounting.

- Equipment supplied within a lockable enclosure need not be installed within an area of restricted access.
- However, equipment not within a lockable enclosure should be located within an area of restricted access to competent personnel only.

The enclosure should be located in a dry environment, mounted vertically on a flat wall.

1. Open the enclosure (unlock with the key provided if necessary) but do NOT attempt to remove the door.
   - The galvanised back plate is removable, if this makes wall mounting easier, but it does not restrict access to the mounting holes.
   - Before fixing this unit to a wall remove any knock-outs that are required, located on the top and bottom of the line card enclosure, as these can be used for cable entries.
   - There are two × 20mm knockouts at the top and four × 20mm knockouts at the bottom of the enclosure.
   - Use appropriate grommets as required.

Only use the knock-outs provided to prevent potential damage to the line card.

Any attempt to create additional holes in the enclosure may cause metal shards from the drilling to cause electrical damage to the power supply and electronics contained within the line card.

2. Use the enclosure as a template to mark the four wall mounting holes.
3. Fix the enclosure securely to the wall using **appropriate** fixings for the wall surface.

GDX Enclosure

The four wall mounting holes are indicated below. Use appropriate wall fixings to secure the enclosure to the wall.

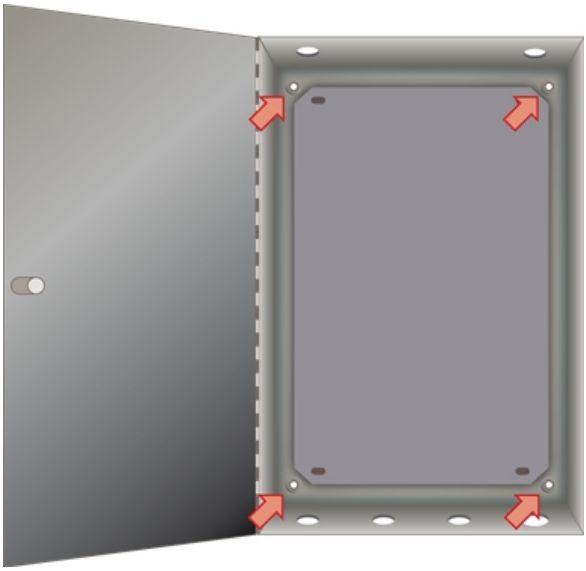

Enclosure mounting holes

The thermal resetting fuse for each handset will not require replacing if it activates. Resolve the problem and the fuse will reset itself once it cools in a few seconds.

Audio Line Card Layout and Legend

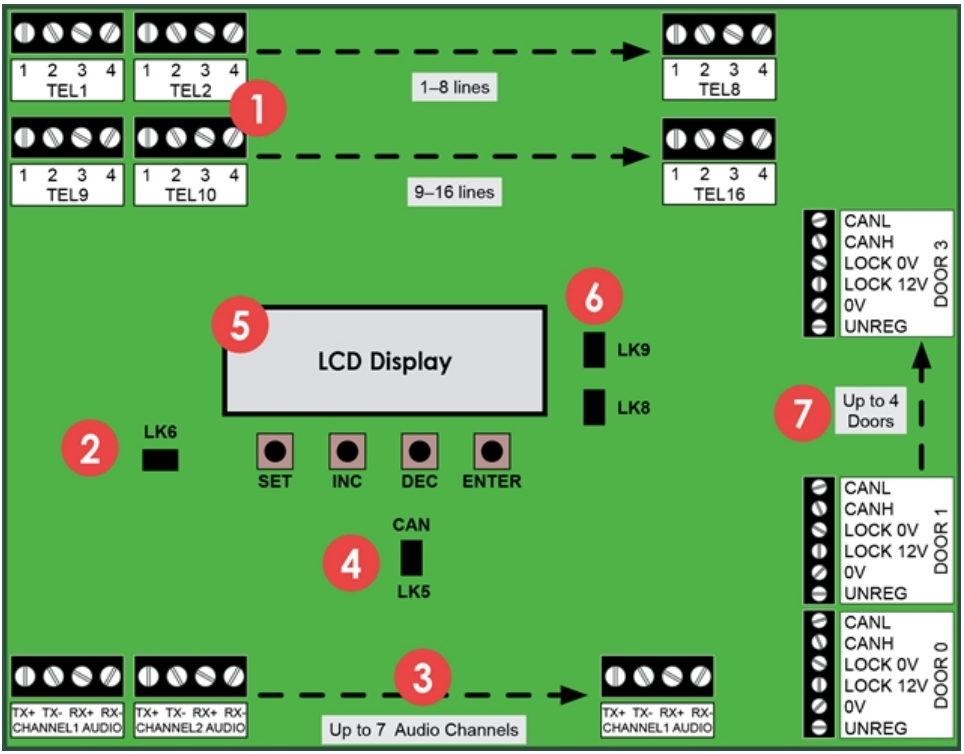

No.	Description
1	Telephone handset connections
2	LK6 Change / Protect header link
3	Audio channel connections
4	LK5 CAN data bus header link
5	LCD display and pushbuttons
6	LK8 and LK9 (DO NOT REMOVE)
7	Door power and control connections

3 Line Card Connections

The connections from a Line Card to a door Entrance Panel comprise of audio, power and data connections.

Entrance Panel connections

Cable run should be max. 100m.

Cable type	Cable use
6 pair	Door panel power, data and audio
2 core 0.75mm min. flex	Lock power

Door lock cabling (between Entrance Panel and Line Card) must be separate to cabling for door panel power, data and audio.

Cabling to Fire Switches and Push To Exit buttons must also be separate 2-core flex cables as they also carry lock power.

Door Entrance Panel	Line Card
UNREG	UNREG
0V	0V
LOCK PWR +12V	LOCK 12V
LOCK PWR 0V	LOCK 0V
CAN H	CAN H
CAN L	CAN L

CAN Header must be set to IN for Audio Line Card address 0. All other Line Card CAN headers must be set to OUT.

CANH and CANL do not cross over.

The following fuses are fitted on a Line Card:

Fuse No	Fuse Value	Fuse Use
FS1	3A QB	Overall card fuse
FS2	1.6A QB	Door 00 electronics and lock
FS3	1.6A QB	Door 01 electronics and lock
FS6-FS21	500mA	Handsets 1-16 thermal resetting

Audio connections

Door Entrance Panel	Line Card
RX+	TX+
RX-	TX-
TX+	RX+
TX-	RX-

The RX and TX connections cross between the Line Card and the door Entrance Panel but the + and – connections do not.

The “Audio Channel” for a door Entrance Panel is 1 or 2 and can be checked and set at the door Entry Panel LCD on power up. Use the matching Audio Channel on the Line Card for the door audio.

If a handset 'bleeps' when it is called and the green LED is lit but there is no audio or ring tone, check: (1) the correct audio channel is used; (2) audio channel settings and audio channel wiring are also correct.

Connecting Audio Line Cards

This is the wiring diagram for additional Audio Line Card connections.

The wiring connection to another Audio Line Card is the same even if it is in a separate enclosure.

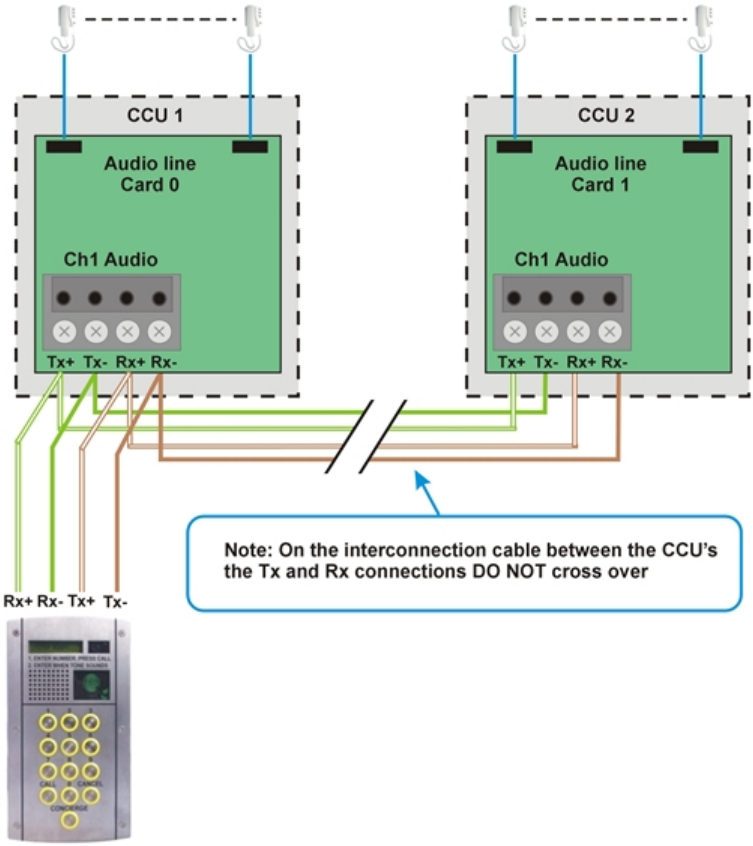

Ensure the CAN bus is wired in parallel across both Line Cards

Telephone handset connections

Only GDX telephone handsets should be installed with this system.

Under no circumstances should handsets of any other type be connected onto a GDX Line Card as permanent damage may occur.

Cable type	Cable use
3 pair	Handset power, data and audio

The connections from the Line Card to the telephone handset are as follows:

Connection	Use
1	Handset audio to entrance panel
2	DTMF signals for handset buttons
3	0V
4	+12VDC

Telephone handsets **must** be connected to the Audio Line Card starting with the lowest postal address first, as per the front faceplate engraving. The entrance panel buttons have been factory-wired to accept this order.

For digital Entrance Panel orders, programming of the postal addressing of the handsets will be completed by the manufacturer.

The system will not work as expected if this connection sequence is not followed.

Video connections

The block schematic below shows the main components and how to connect them.

Additional Video Line Cards must be connected Video+ to Video+ and Video– to Video– on the same Video channel

Each Video Line Card can support up to 8 handsets

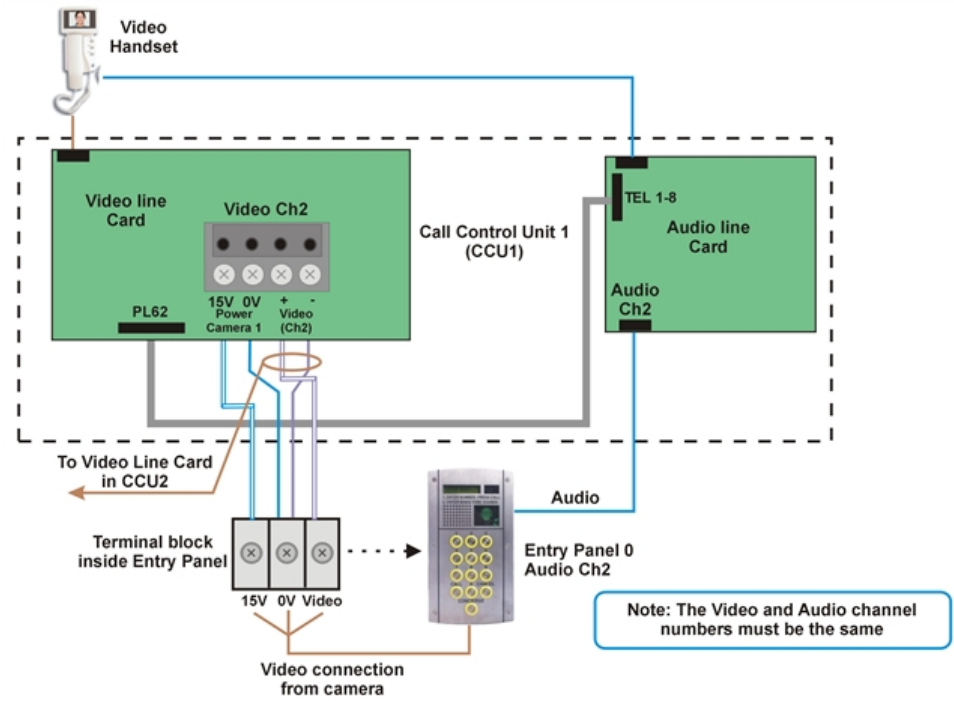

Video Handset Connections

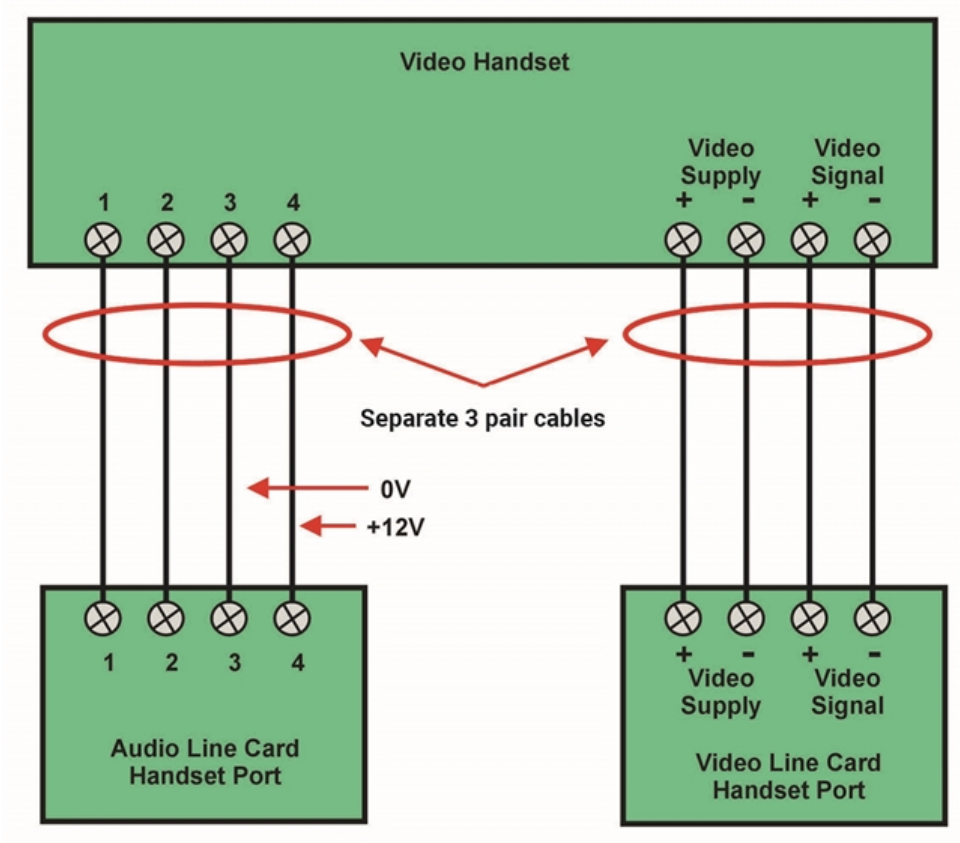

4 Power Up Checks

Complete these checks before and after system power up.

Before system power Up

1. Use a multi-meter (OHMS) to check the impedance between the CANH and CANL terminals is approx. 60 ohms, both at the Entrance Panel(s) and at the Line Card(s). This is **essential** for reliable system operation.

Headers are factory fitted on Line Card 00 and Entrance Panel 00.

- If impedance > 1K Ohms, no CAN headers are fitted.
- If impedance > 60 Ohms, only 1 CAN header is fitted.
- If impedance < 60 Ohms, too many CAN headers are fitted.

2. Check the audio connections between the door entrance panel(s) and the control unit crossover the TX and RX connections but not the + and – connections.

After system power up

1. Use a multi-meter (VOLTS DC) to check the voltage output of the PSU to the Line Card is set to +13.8 VDC and adjust PSU output to 13.8 VDC if required.

If the PSU is overloaded or adjusted too high, it may shut down temporarily to protect itself. Wait for 5 mins to reset.

2. The 1st Entrance Panel **must** be installed on Door 0 connection on the Audio Line Card.
3. Check the 1st Entrance Panel is set to Audio Channel 1, "AUD CHANNEL 001". Use the reset button on the door Entrance Panel or power down and up again to display.
4. Also check the 1st door Entrance Panel is connected into the correct audio channel on the Line Card.
5. Check the 2nd door Entrance Panel is set to Audio Channel 2, "AUD CHANNEL 002". Use the reset button on the door Entrance Panel or power down and up again to display.
6. Also check the 2nd door Entrance Panel is connected into the correct audio channel on the Line Card.

Power Up Display

At power up, the Line Card LCD will show version details of the installed software components:

- BOOTLOADER Vx.xx
- GDX LITE CARD
- VERSION GDXLCxx

These details will be requested if you contact Technical Support.

Card Addressing

For an 8 or 16 way system, the 1st Line Card default address is displayed on the LCD at power up or reset as “CARD NUMBER 000”.

For a 24 or 32 way system, the 2nd Line Card default address is shown as "CARD NUMBER 01".

5 LCD Messages

The LCD will display useful messages about system activity and operation which can aid fault finding and commissioning.

Telephone handset scanning status

During standard operation the Line Card continuously monitors the attached telephone handsets and cycles every few seconds. An example sequence for the status displays is shown below:

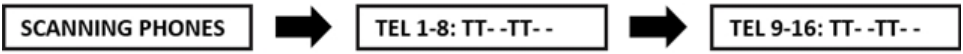

TEL 1-8 and TEL 9-16 correspond to the numbered "TEL" connection on the Line Card. "T" means a handset is connected and "-" shows no connection is detected. In the previous example it shows handsets detected in positions 1,2,5,6,9,10,13,14.

When a handset is called from an door entrance panel, the “T” becomes a “C” for the duration. of the call.

During commissioning verify each "T" is on the correct numbered connection AND changes to "C" when called.

Privacy Period

The default setting is six hours and applies to all handsets on the Line Card. This can be changed using the settings pushbuttons on the Line Card and will not require a system power down.

Telephone handset operation status

The following messages will be shown depending on the handset operation. The number displayed is the position of the telephone handset on the control unit card, i.e. 1 to 16.

TEL 1 Lock Open	TEL 1 Priv On	TEL 1 Priv Off
	TEL 1 On Hook	TEL 1 Off Hook

Call to flat/apartment handset

When a flat is called **CH1 CALL TEL 01** is displayed, indicating the channel (CH) and flat number (01). **CH1 RESET TEL 01** is displayed when the call ends.

Status LEDs

Red LED1 and red LED2 indicate a healthy +12V and +5V supply on the Line Card respectively.

6 Program Settings

The range of values allowed and the factory defaults supplied are shown below:

Setting	Range Allowed	Factory Default
Card number	00-01	00
Privacy time	01-15 Hours	06
Video On/Off	ON / OFF	OFF

Change Factory Settings (IC28 EEPROM)

Settings are stored in an EEPROM memory IC (IC28) on the Line Card. This IC can be swapped onto a replacement card to save re-programming all of the current card settings.

Settings pushbuttons

Settings can be displayed and changed by using the four pushbuttons below the LCD display.

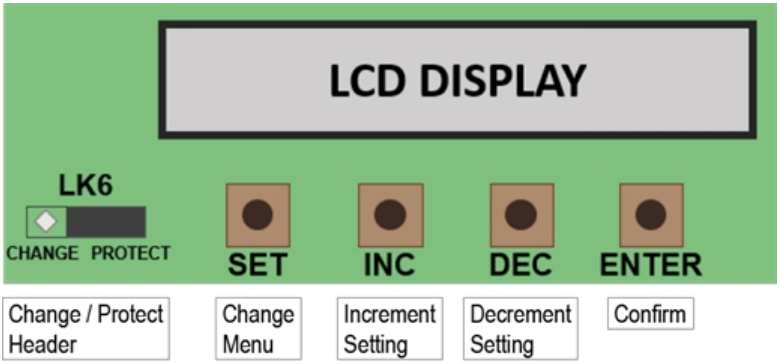

Change settings

Move LK6 to CHANGE to amend settings.

1. Move LK6 to pins 1 and 2 (CHANGE).
2. Use INC and DEC to change the setting to the required value.
3. Confirm the change with the ENTER pushbutton.
4. Move LK6 back to pins 2 and 3 (PROTECT).

LK6 must be on PROTECT to function.

If the link is left in the “CHANGE” position then “SECURE SETTINGS” will be displayed on LCD display until LK6 is placed correctly.

Settings menu timeout is 8 secs after the last button press.

— INTENTIONALLY LEFT BLANK —

— INTENTIONALLY LEFT BLANK —

— INTENTIONALLY LEFT BLANK —